FL-343-Pico/1~50mW

PICOSECOND ALL FIBER PULSED LASER

Picosecond all fiber pulsed laser at 343nm is made features of high output power stability, good beam profile, ultra compact, long lifetime,cost-effectiveness and easy operating, which is widely used in scientific research, laser processing, and so on.

SPECIFICATIONS

Wavelength (nm)	343±1		
Operating mode	Pulsed		
Output power (mW)	10@5MHz	30@5MHz	50@5MHz
Power stability (rms, over 4 hours)	<5%,<3%		
Pulse width (ps)(1)	One fixed value between 100~900ps		
M^2 factor	<2		
Repetition frequency (MHz)(2)	One fixed value between 0.1-20MHz		
Polarization ratio	> 15dB		
Warm-up time (minutes)	<15		
Beam height from base plate (mm)	30		
Delivery cable length (m)	variable		
Operating temperature (℃)	15~35		
Power supply	220V AC / 12V DC		
Expected lifetime (hours)	10000		
Warranty	1 year		
Options	(1) Pulse width 100~900ps variable (2) Repetition rate 0.1~20MHz variable RS 232 interface Higher output power can be customized		

FL-1030-Pico	Third harmonic	FL-343-Pico
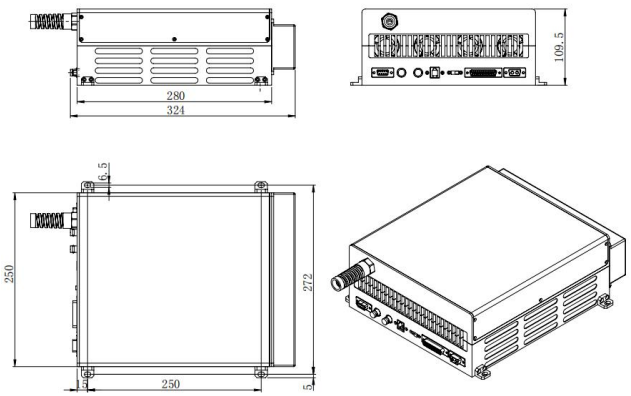	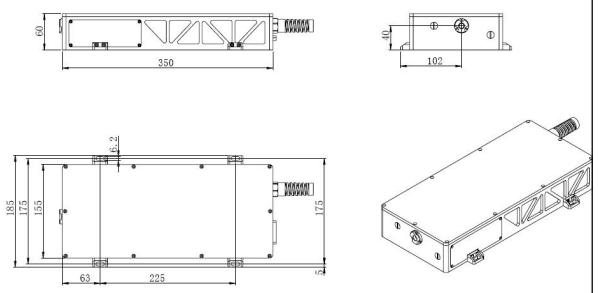	
324(L)×282(W) ×109.5(H) mm³ 8.5 kg	350(L)×185(W) ×60(H) mm³ 2.5kg	Third harmonic FL-1030-Pico