长春新产业光电技术有限公司
Changchun New Industries Optoelectronics Tech. Co.,Ltd.
DATA SHEET

MLL-III-1420/1~500mW

LOW NOISE INFRARED DIODE LASER AT 1420nm

It features ultra compact design, long lifetime, cost-effectiveness and easy operation. They are used in measurement, communication, spectrum analysis, etc.

SPECIFICATIONS

Wavelength (nm)		1420±10
Operating mode		CW
Output power (mW)		>1, 100, 200, …, 500
Power stability (rms, over 4 hours)		<1%, <2%, <3%
Transverse mode		Multimode
Noise of amplitude(rms,20Hz~20MHz)		<1%
Dimensions of beam at the aperture (mm)		~5×8
Beam divergence, full angle (mrad)		<3. 0
Warm-up time (minutes)		<5
Beam height from base plate (mm)		24. 8
Operating temperature (℃)		10~35
Power supply	85-264VAC	PSU-III-LED/ PSU-III-FDA (Frequency for 1Hz-30kHz)
	100-240VAC	PSU-A-D (Frequency for 30kHz -100kHz)
TTL / Analog modulation		TTL or Analog with 1Hz-1kHz 1kHz-10kHz, 10kHz-30kHz, 30kHz-100kHz optional
Expected lifetime (hours)		10000
Warranty		1 year

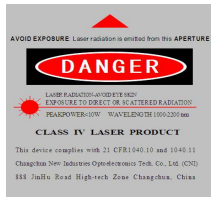

MLL-III-1420	PSU-III-LED	PSU-III-FDA	PSU-A-D
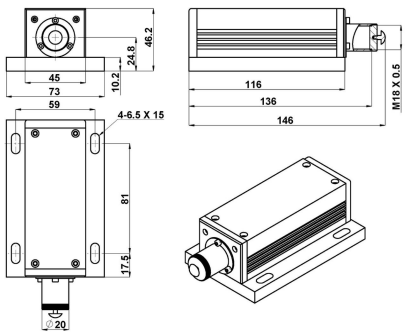	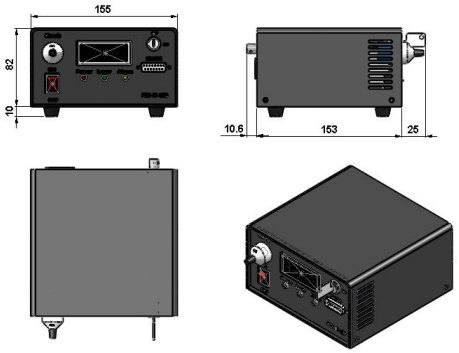	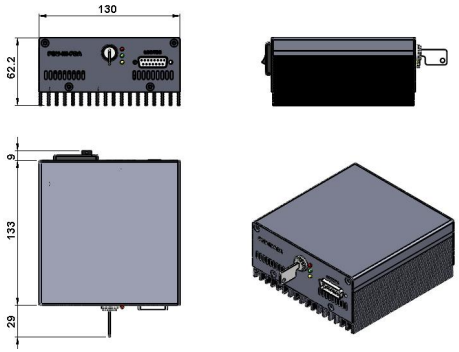	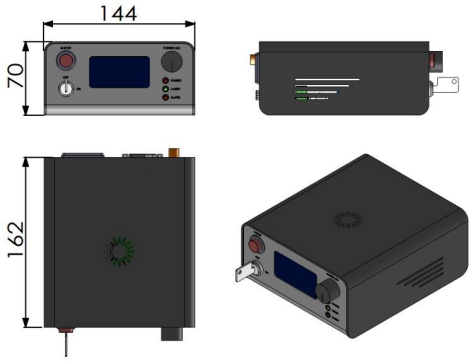
146 (L) ×73(W) ×46.2 (H) mm³, 0.7kg	188.6 (L) ×155(W) ×92 (H) mm³, 1.5kg	171(L) ×130(W) ×62.2 (H) mm³, 1.2kg	162(L) ×144(W) ×70 (H) mm³, 1.0kg

Website: http://www.cnilaser.com E-mail: sales@cnilaser.com Tel: +86-431-85603799 Fax: +86-431-87020258