OEM-HD-637 /1400-2000mW

RED DIODE LASER
At 637nm

OEM diode red laser at 637nm is made features of long lifetime, low cost and easy operating, which is widely used in measurement, spectrum analysis, laser lighting show, etc.

SPECIFICATIONS

Wavelength (nm)	637±5	
Operating mode	CW	
Output power (mW)	>1400, >2000	
Power stability (rms, over 4 hours)	<1%, <3%, <5%	
Beam diameter at the aperture ($1/e^2$ mm)	3.5×4	
Beam divergence, full angle (mrad)	<1	
Polarization direction	Horizontal+ Vertical	
Warm-up time (minutes)	<5	
Beam height from base plate (mm)	35 (OEM-HD-637)	68.2 (HD-637-HS)
Operating temperature (℃)	25+/-3 (OEM-HD-637)	10-35 (HD-637-HS)
Power supply (100-240VAC or 24V)	PSU-HD-OEM	
Modulation option	TTL/Analog 1Hz-5KHz, 1Hz-10KHz, 1Hz-30KHz, and TTL on/off	
Expected lifetime (hours)	10000	
Warranty	1 year	

OEM-HD-637	HD-637-HS	PSU-HD-OEM	Adapter
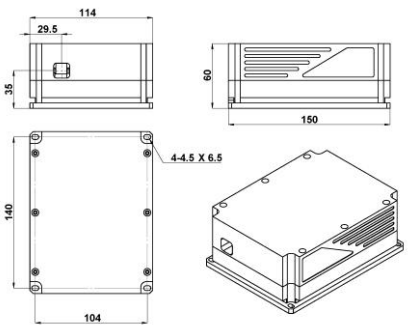	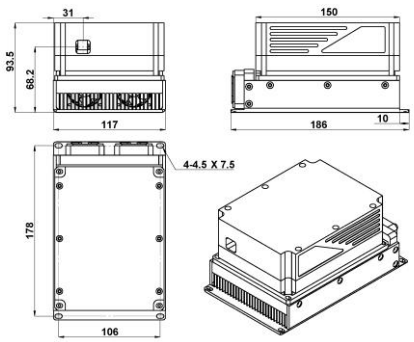	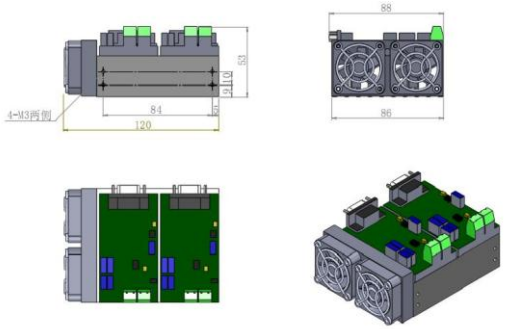	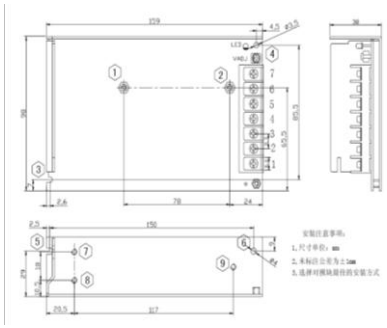
150(L)×114(W) ×60(H) mm^3,2.8kg	186L)×117W) ×93.5(H) mm^3,3.3kg	86(L)×94(W) ×53(H) mm^3, 0.20 kg	159(L)×98(W) ×38(H) mm^3, 0.2kg

Website: http://www.cnilaser.com E-mail: sales@cnilaser.com Tel: +86-431-85603799 Fax: +86-431-87020258